JX-P420 POSITION TRANSDUCER INSTALLATION GUIDE

DIMENSIONAL INFORMATION

RANGES TO 50" (1250 MM)

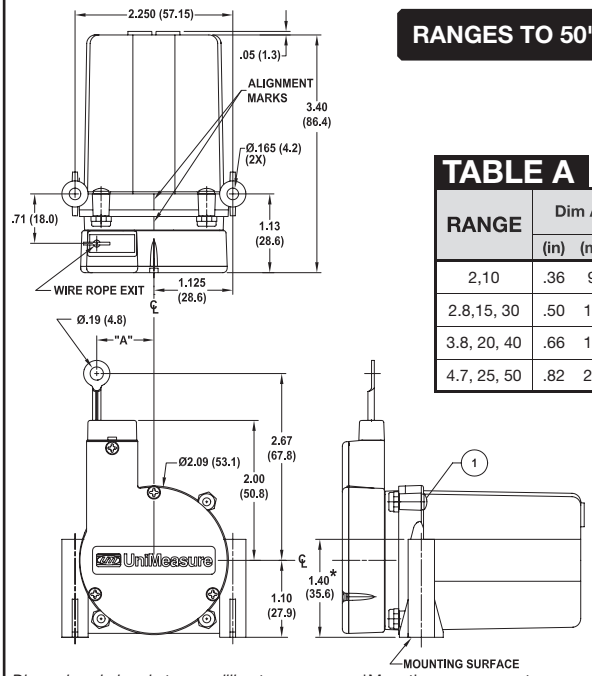

FIG 1

TABLE A

RANGE	Dim A (in)	Dim A (mm)	Nominal Cable Tension (oz)	Nominal Cable Tension (N)
2,10	.36	9.1	16	4.4
2.8,15, 30	.50	12.7	14	3.9
3.8, 20, 40	.66	16.7	11	3.1
4.7, 25, 50	.82	20.8	8	2.2

Dimensions in brackets are millimeters. *Mounting screws must accommodate this distance.

RANGES 60 & 80" (1250 MM)

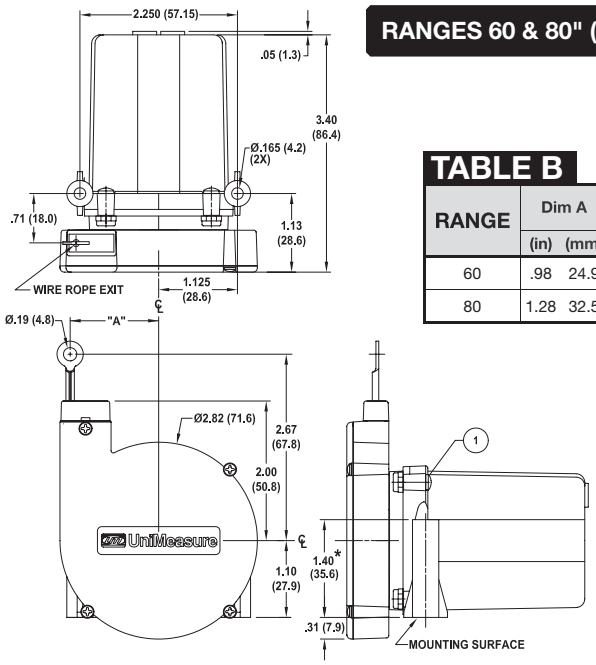

FIG 2

TABLE B

RANGE	Dim A (in)	Dim A (mm)	Nominal Cable Tension (oz)	Nominal Cable Tension (N)
60	.98	24.9	10	2.8
80	1.28	32.5	8.6	2.4

Dimensions in brackets are millimeters. *Mounting screws must accommodate this distance.

SPECIFICATIONS

Output.....4 to 20 mA
Excitation Voltage .....9 to 35 VDC
Load Resistance (Total Loop) .....See Graph
Min. Supply Voltage.....(.02 x Load Res.) + 9 VDC
Linearity:
Ranges to 4.7" .....±1.0% Full Scale
10" to 25" range.....±0.5% Full Scale
30" to 80" range.....±0.25% Full Scale
Operating Temperature .....-25°C to 75°C
Storage Temperature .....-50°C to 80°C

MOUNTING

FIG 3

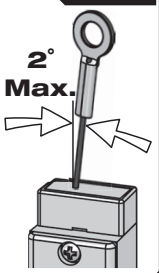

1 To maximize wire rope life, align transducer with moving element so that wire rope exits perpendicular to axis of wire rope exit hole within 2° *(See FIG 3)*.

2 Use Table A or B to determine wire rope exit location relative to transducer mounting holes.

3 Mount unit with two #8 or two M4 (or smaller) pan head machine screws. On units with ranges of 60" (1500 mm) or 80" (2000 mm), place spacer blocks under mounting surface *(See FIG 2)*. Torque 8-32 screws to **8 lb-in** maximum. Torque M4 screws to **0.80 N-m** maximum.

REPLACEMENT WIRE ROPE WIPERS

FIG 4

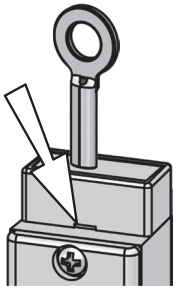

The JX transducer contains wire rope dust wipers which are located just beneath the wire rope exit location. Periodic, replacement of the dust wipers may be necessary depending upon the amount of dust in the operating environment.

To access the dust wipers, remove the dust wiper cover by placing a small blade screwdriver into the slot as shown in *FIG 4* and pry upward while squeezing the ends of the cover. The wipers may be removed with tweezers and cleaned or replaced. The replacement wiper kit which contains six pair of prelubricated wipers is UniMeasure part number 10198.

To install replacement wipers, place a wiper into wiper opening on both sides of the wire rope. Press wiper cover into place until detented.

4 TO 20 mA OUTPUT

The 4 to 20 mA output transducer is a 2-wire, loop powered device. The transducer, power supply, and current monitor must be connected in series as illustrated in *FIG 6*. For best noise immunity, use twisted pair shielded cable between each of the electrical components. The shield of the cable should be open at the transducer and grounded at the electrical interface.

The minimum supply voltage is a function of total loop resistance. It may be calculated using the formula: V = (0.02 x Load Res.) + 9 VDC. Supply Voltage may also be determined from the graph at right.

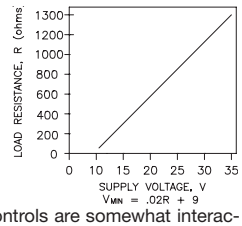

Since the zero and span controls are somewhat interactive, recheck the zero and span settings and adjust as necessary. Insure that a sealing o-ring *(See FIG 7)* is on each of the two Phillips head screws. Thread each screw into each potentiometer access hole until the head of the screw bottoms against the raised shoulder. Do not tighten the screw against the shoulder.

ZERO & SPAN POTENTIOMETER ADJUSTMENT

To adjust the zero and span, first remove the two Phillips head screws from the potentiometer access holes located on the end of the transducer *(See FIG 7)*. Visually locate the adjustment screws on each potentiometer. The screws are very small and will require a small blade type screwdriver (.06" (1.5mm) max. blade width x .016" (.4mm) max. blade thickness) for the adjustment. Extend the wire rope of the transducer to the desired zero position (must be within 0% to 30% of range) and adjust the Zero potentiometer to give a 4 mA output. Extend the wire rope to the desired maximum position (must be within 80% to 100% of range) and adjust the Span potentiometer for the maximum output current of 20 mA.

ELECTRICAL CABLE WIRING

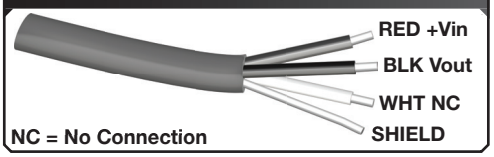

ROTATION OF WIRE ROPE EXIT

FIG 5

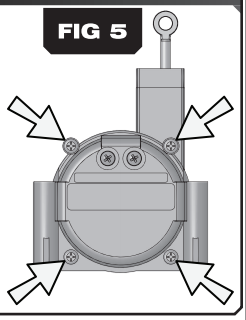

To rotate wire rope exit location, loosen four screws *(See FIG 5*, which retain mechanism to mounting housing. Note that alignment marks on mechanism occur at 45° intervals. Rotate housing to desired position and torque screws to **50 oz-in (0.35 N-m)**.

CIRCUIT DIAGRAM

FIG 6

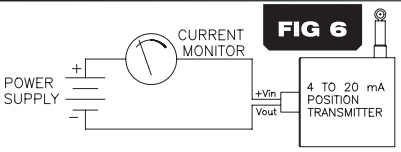

ZERO & SPAN POTENTIOMETER ACCESS

FIG 7

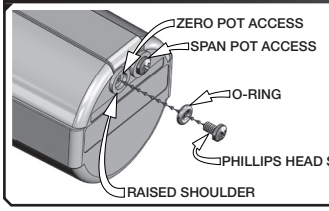

CONNECTOR WIRING

As viewed on transducer and on cable attachment side of mating connector.

UniMeasure
Herbertek
www.herbertek.se
info@herbertek.se
+46-18 590510

FOR SENSITIVITY INFORMATION, SEE OPPOSITE SIDE